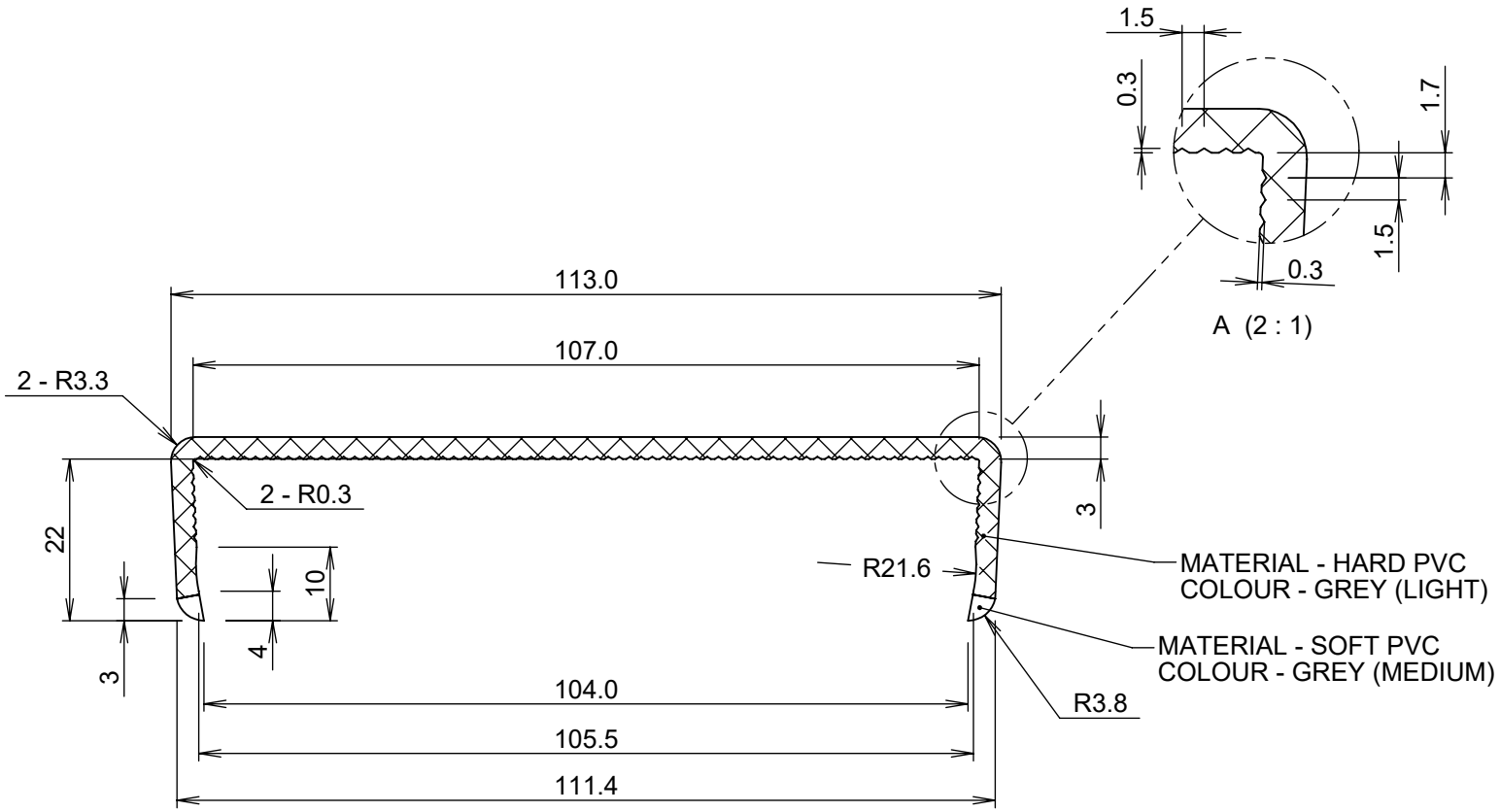

MATERIAL - AS NOTED
COLOUR - AS NOTED
EXTRUSION LENGTH - 5.0 Mtrs
ACTUAL PANEL THICKNESS - 105.6mm

GENERAL TOLERANCE ±0.2 UNLESS OTHERWISE STATED

				DIMENSIONS IN mm.
				APPV'D
				CHK'D
			J.M.	DRAWN
			13-11-07	DATE
D	C	B	A	ISSUE

StyroMAX

THIRD ANGLE

THIS DRAWING IS SUBJECT TO COPYRIGHT AND SHALL NOT BE COPIED WITHOUT CONSENT OF STYROMAX

ITEM No	PART No	DESCRIPTION	QTY.

DESCRIPTION

DOOR CAP - 105mm

SCALE 1:1

PART No. STYROCAP105